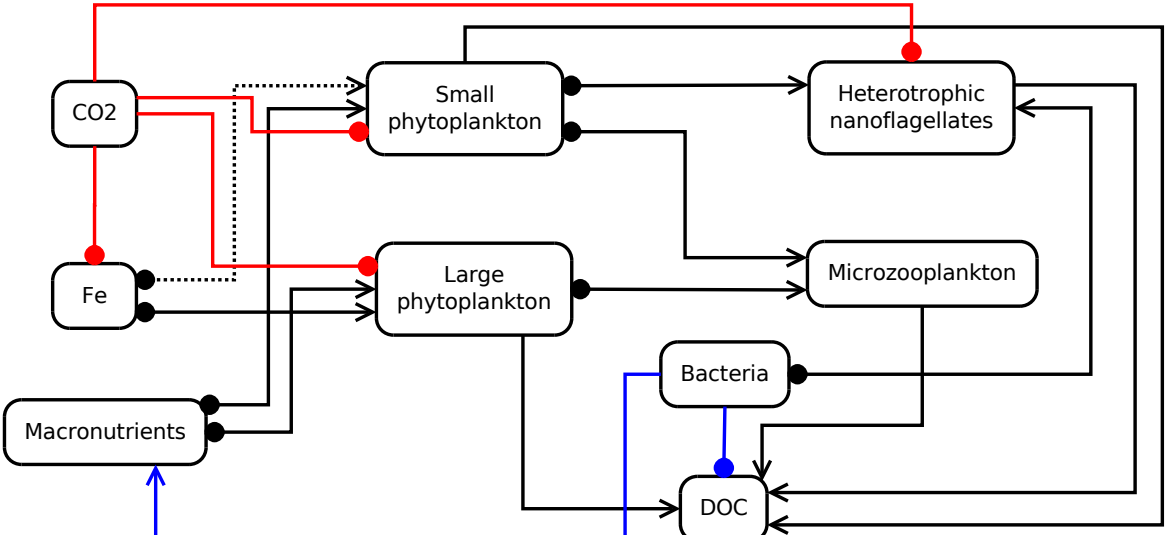
CO2
Fe
Macronutrients
Small phytoplankton
Large phytoplankton
Heterotrophic nanoflagellates
Microzooplankton
Bacteria
DOC